Hygienic Break Away Check Valve

The Right Connection®

Application
- designed to protect process lines from accidental damage.

Features
- In case of a 13kN pullover Breakaway bolts will break, protecting the downstream process pipe whilst simultaneously closing the integrated check valve.
- Locking five-cam design provides easy alignment and tight connection
- Can easily be retro fitted to any existing loading bay

Materials
- All stainless construction 316L wetted and 304 non-wetted
- EPDM gaskets 350psi at 70 degrees Fahrenheit
- Polished ID-OD to 3A standards 0.BR max (higher polish available)

Specifications
- Available in sizes 2", 2.5" and 3"
- RJT, Clamp, DIN, IDF, SMS and other end configurations available
- 13kN break load bolt standard. Others available upon request
- Pressure Rating: 145 PSI

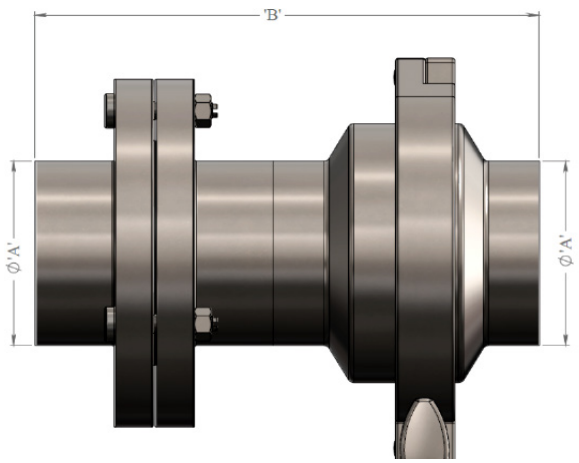

Part	Size (inch)	A (mm)	B (mm)
SBC200B46BB	2	50.8	130
SBC250B46BB	2-1/2	63.5	163
SBC300B46BB	3	76.2	180

*Breakaway coupling repair kits available

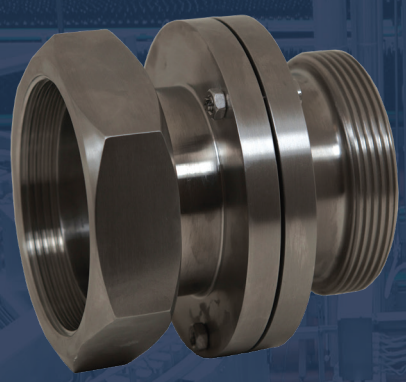

Dixon Group Europe Ltd

350 Leach Place
Walton Summit Centre
Preston PR5 8AS
tel: +44 (0)1772 323529
sales@dixoneurope.co.uk
dixoneurope.co.uk