AG-Series

Agricultural Couplings

The Right Connection®

Applications
- Mobile equipment, snow plows, and agricultural machinery

Sizes
- 1/4" to 1"

Features
- Available with poppet or ball valve
- Couplers have a PTFE anti-extrusion ring
- Poppet valve seals crimped in place to maintain integrity during excessive flow conditions and pressurized connections
- Steel componentry is plated using ROHS Compliant Trivalent Chrome
- Steel coupler sleeves are hardened to resist deformation and maximize service life
- Steel plugs are hardened to provide heavy duty performance and resist brinneling
- Stainless steel balls, retaining rings, and springs maximize corrosion resistance and extend service life
- Push-pull sleeve option
- 1/2" body connect under pressure plug available

Materials
- Body: Steel
- Dust caps and plugs: Elastomer

Interchange Data
- Agricultural Interchange
- Parker/Pioneer 4000 Series
- Faster NS/NV-Series
- Safeway Series-S20
- Stucchi IR-Series

Standards
- ISO7241 'A' (1/2" only)
- ISO5675 (3/4" only)

Specifications
- NPTF, BSPP, and ORB threads
- Nitrile (Buna-N) seals are standard
- Temperature range **-40°F (-40°C)** to **250°F (121°C)**

4AGF4-PS

AG4F4

AG4F4-PV

4AGF4

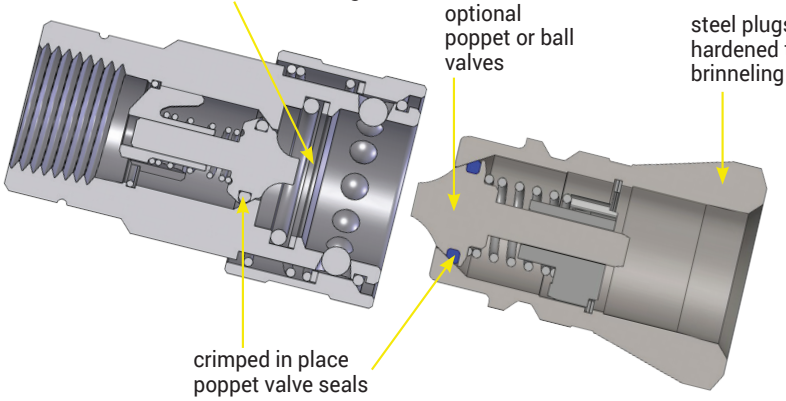

Dixon Quick Coupling

2925 Chief Court
Dallas, NC 28034
ph: 800.839.8980 • 704.334.9175
fx: 800.839.9022 • 704.334.9002
dixonvalve.com

© 2021 DVCC • AGSERIES_621