MLXXXM

CUSTOMER DWG

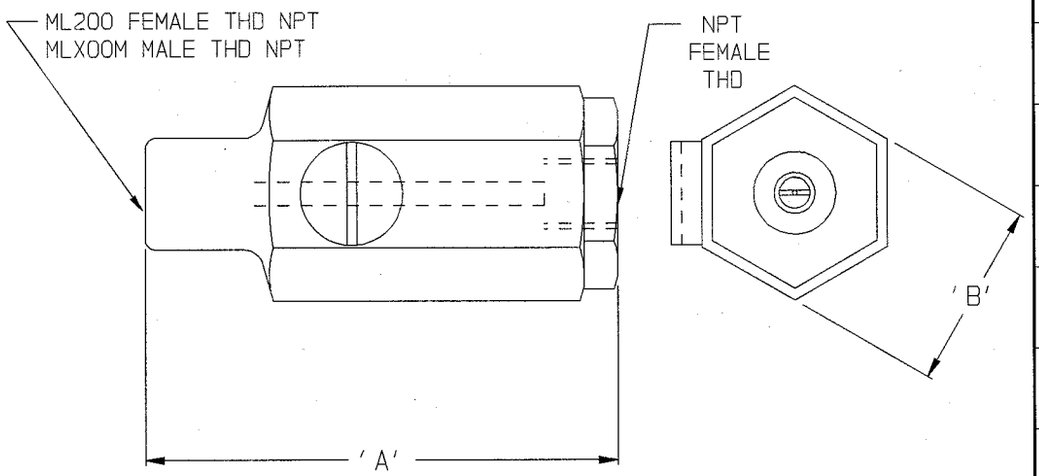

SIZE	PART NO	'A'	'B'	THD	FEMALE THD
3/8"	ML300M	3 3/16"	1 1/8"	3/8"	3/8"
1/4"	ML200M			1/4"	1/4"
1/4"	ML200	2 11/16"	1 1/8"	1/4"	1/4"

CUSTOMER DWG

AGREEMENT TO MAINTAIN CONFIDENTIALITY

This drawing is owned by Dixon Valve & Coupling Co. and shall be returned upon demand. It is loaned on condition that it shall not be copied or reproduced or submitted to others without the owners consent. In accepting it subject to this condition the recipient further agrees that this drawing or any design detail or concept disclosed herein shall not be used in any way detrimental to or in conpetition with the Owner. If the recipient does not agree to the terms of this agreement, they shall return this drawing immediately.

DIXON

The Right Connection™

DIXON VALVE & COUPLING CO.
U. S. A.

TITLE: MINI IN-LINE LUBRICATORS

DRAWN BY: 11/7/96 ANDREW JINKS

CHECKED BY: 11-7 96

APPROVAL: STB 12/31/97

MAT'L: ALUMINUM

MLXXXM